PARTS LIST

ITEM	QTY	PART NUMBER	DESCRIPTION
1	1	Post A	
2	1	Lever A	
3	1	Callum U 3	
4	1	Callum U 2	
5	1	Callum U 1	
6	1	Callum U 4	
7	1	Callum U 5	
8	1	Post B	
9	1	Post c	
10	1	Post D	
11	1	Lever B	
12	1	Lever C	
13	1	Lever D	
14	1	Callum L3	
15	1	Callum L2	
16	1	Callum L1	

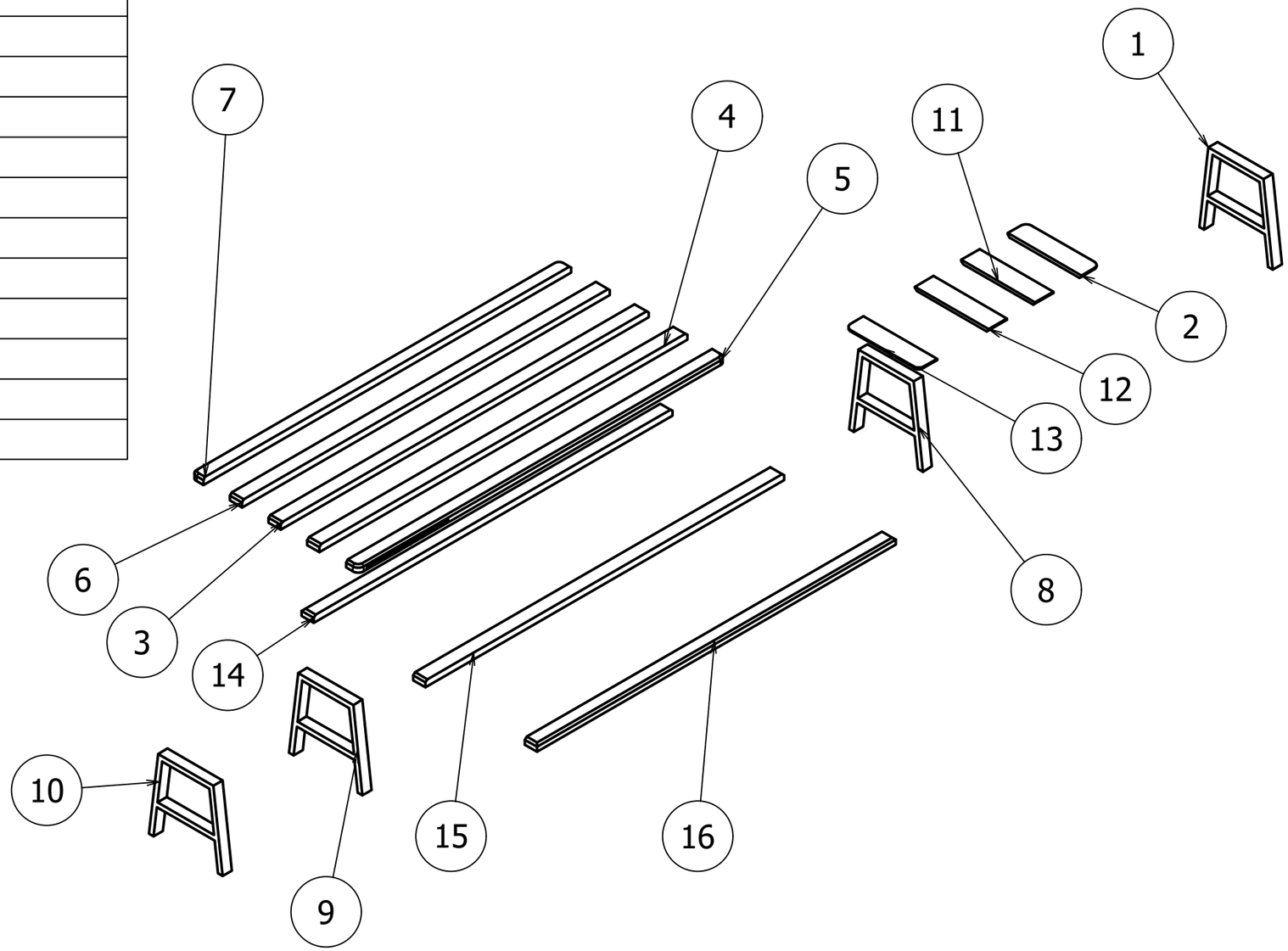

	Name	Date
Author	SSRU	18-Mar-25
Checked		
Approved		

long bench 2025 Assembly

1 / 1

A3